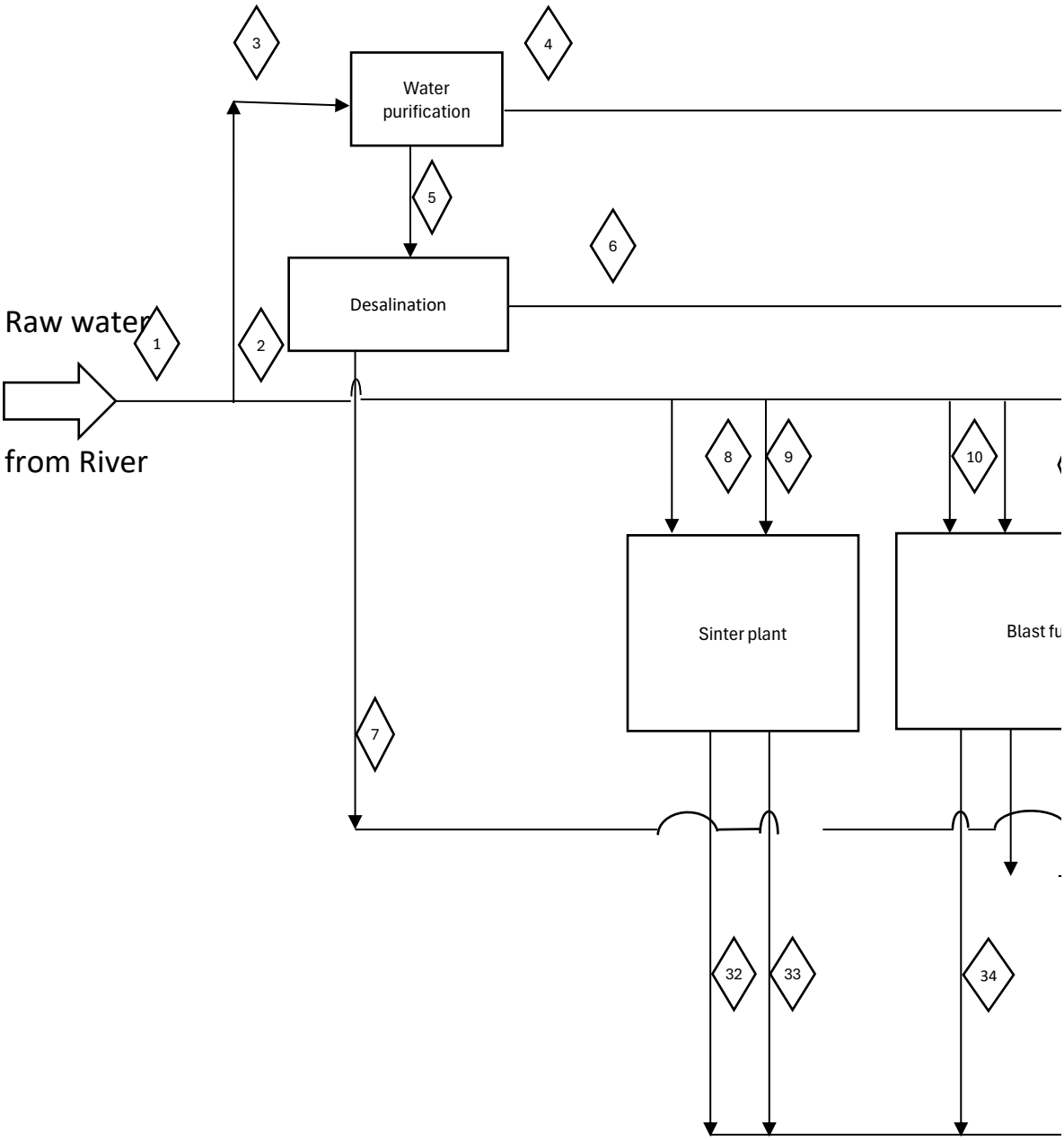
3
4
Water purification
5
6
Desalination
Raw water
1
2
from River
8
9
10
Sinter plant
Blast fu
7
32
33
34

	1	2	3	4	5	6
	Total inlet water	Total raw water	Raw water to water purification	Total purified water	Pure water to desalination	Total desalinated water
Flow, m3/h	6589,30	3825,00	2764,30	2644,30	120,00	83,10
Purification			2764,30	2644,30		
Desalination					120,00	
Sinter						
Blast Furnace						
Process						
Converter						
Casting						
HSM						
CRM						
Galva						
Air plant						
Hydrogen						
Detox						
Filtration						
Raw water use cooling once thru, m3/h	3104,00					
Pure water use cooling once thru, m3/h	1471,00					

Process	Flow in	Flow out	Leakage
		Flow, m3/h	
Purification	2764,30	2764,30	0,00
Desalination	120,00	201,60	-81,60
Sinter	197,00	194,00	3,00
Blast Furnace	3751,40	3566,00	185,40
Process	379,00	379,00	0,00
Converter	433,00	350,00	83,00
Casting	239,00	180,00	59,00
HSM	217,60	147,00	70,60
CRM	1044,20	1043,00	1,20
Galva	11,90	11,00	0,90
Air plant	440,00	440,00	0,00
Hydrogen	19,30	0,00	19,30
Detox	0,00	36,00	-36,00

Filtration	287,00	287,00	0,00
Total	9903,70	9598,90	304,80

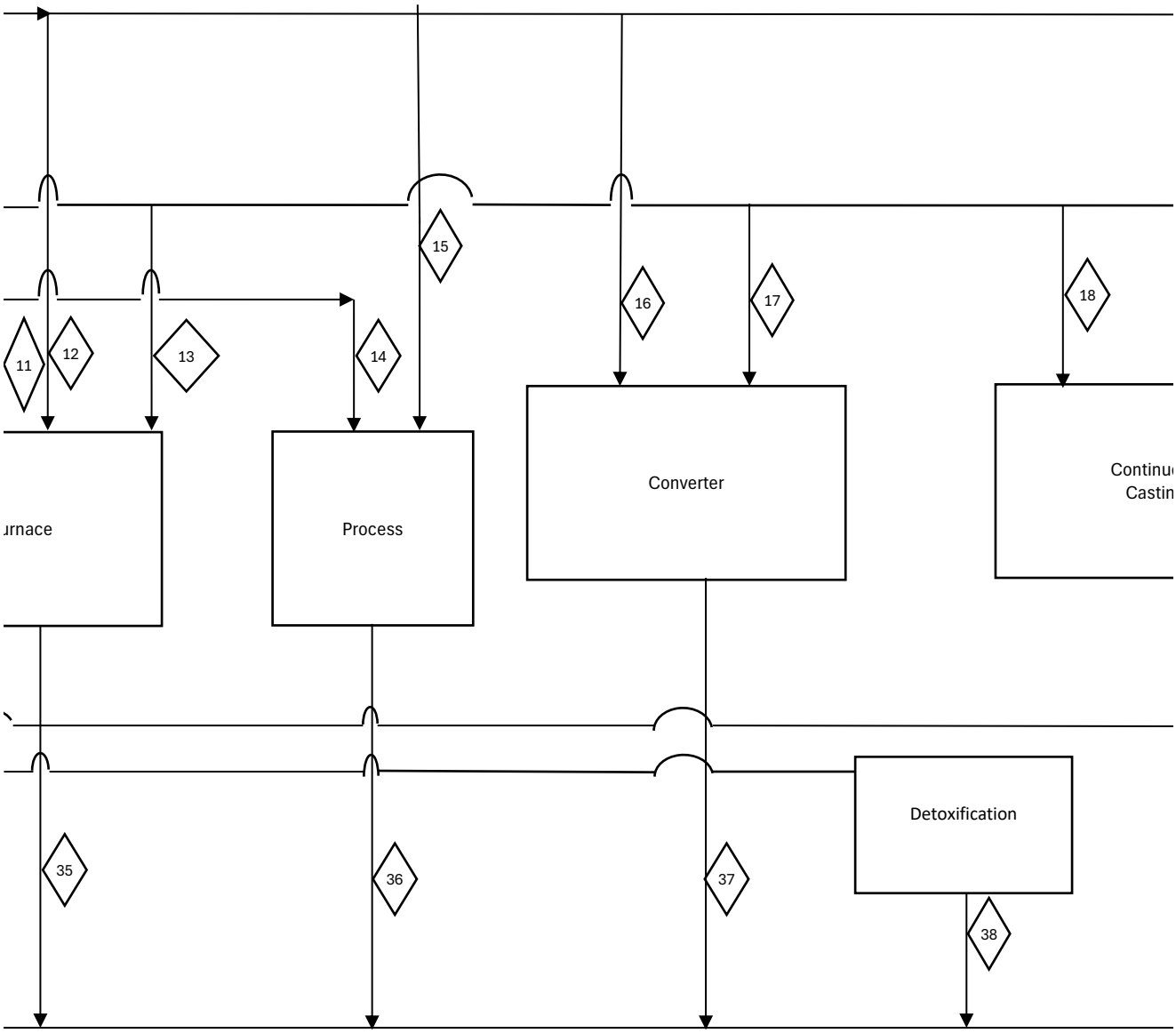
11
12
13
14
15
16
17
18
urnace
Process
Converter
Continu
Castin
Detoxification
35
36
37
38

7	8	9	10	11	12	13	14	15	16
Effluent water from desalination	Raw water to sinter plant process	Raw water to sinter plant cooling	Raw water to BF gas cooling	Raw water to slag granulation	Pure water to BF gas washing	Make-up desalinated water to cooling	Raw water to process	Cooling water to process	Pure water to converter gas washer
118,50	9,00	188,00	2537,00	1010,00	201,00	3,40	81,00	298,00	395,00
	9,00	188,00							
			2537,00	1010,00	201,00	3,40			
							81,00	298,00	
									395,00
287,00									

Facility Block Flow Diagram - Case Study Bremen

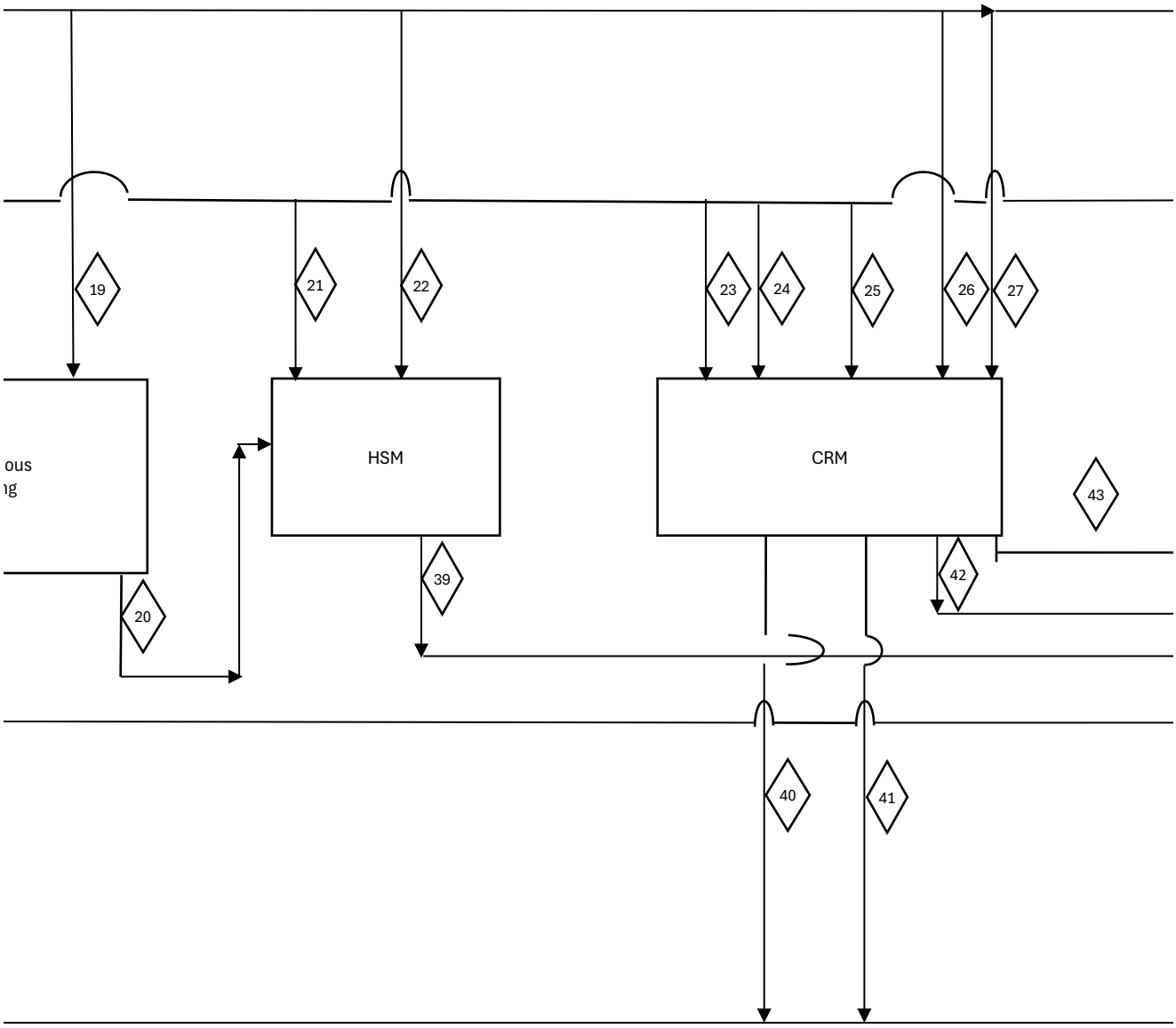

17	18	19	20	21	22	23	24	25	26
Desalinated water to steam generation	Make-up desalinated water to cooling	Pure water to slab and heat exchanger cooling	Water to HSM cycle	Desalinated water to HSM cooling	Pure water to HSM cooling	Desalinated water for cooling annealing plant	Desalinated water for emulsion preparation	Desalinated water to pickling process	Cooling water for regeneration
38,00	6,00	233,00	180,00	10,60	27,00	4,60	1,30	7,30	152,00
38,00									
	6,00	233,00							
			180,00	10,60	27,00				
						4,60	1,30	7,30	152,00

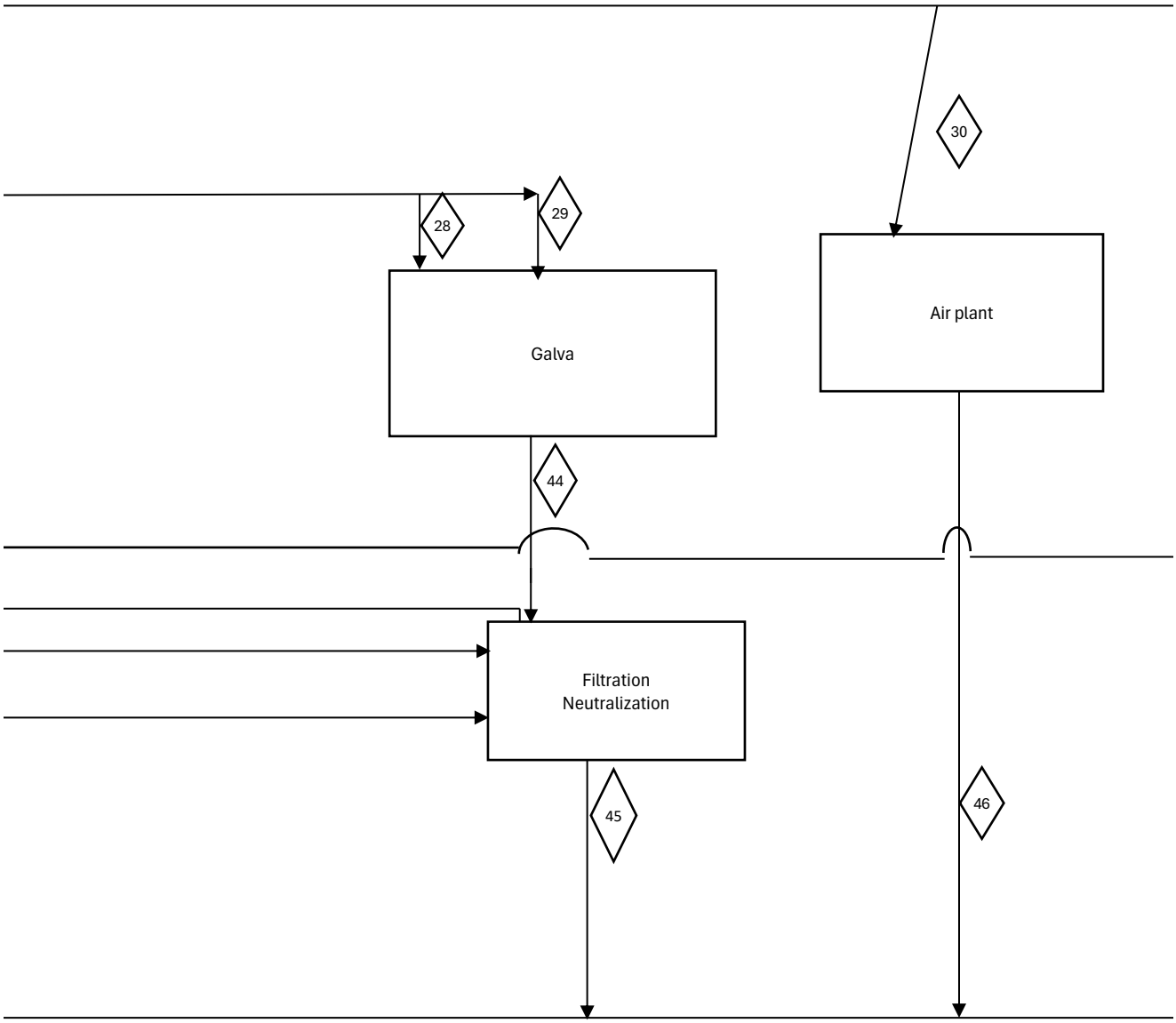
30
28
29
Galva
Air plant
44
Filtration
Neutralization
45
46

27	28	29	30	31	7	32	33	34	35
Pure water to cooling CRM	Desalinated water to process	Desalinated water to cooling	Cooling water to air plant	Cooling water to prerare H2 gas	Effluent water from desalination	Effluent water from sinter plant cooling	Effluent water from sinter plant process	Effluent water from slag granulation	Effluent water from cooling
879,00	11,80	0,10	440,00	19,30		185,00	9,00	1000,00	2530,00
					118,50				
						185,00	9,00		
								1000,00	2530,00
879,00									
	11,80	0,10							
			440,00						
				19,30					

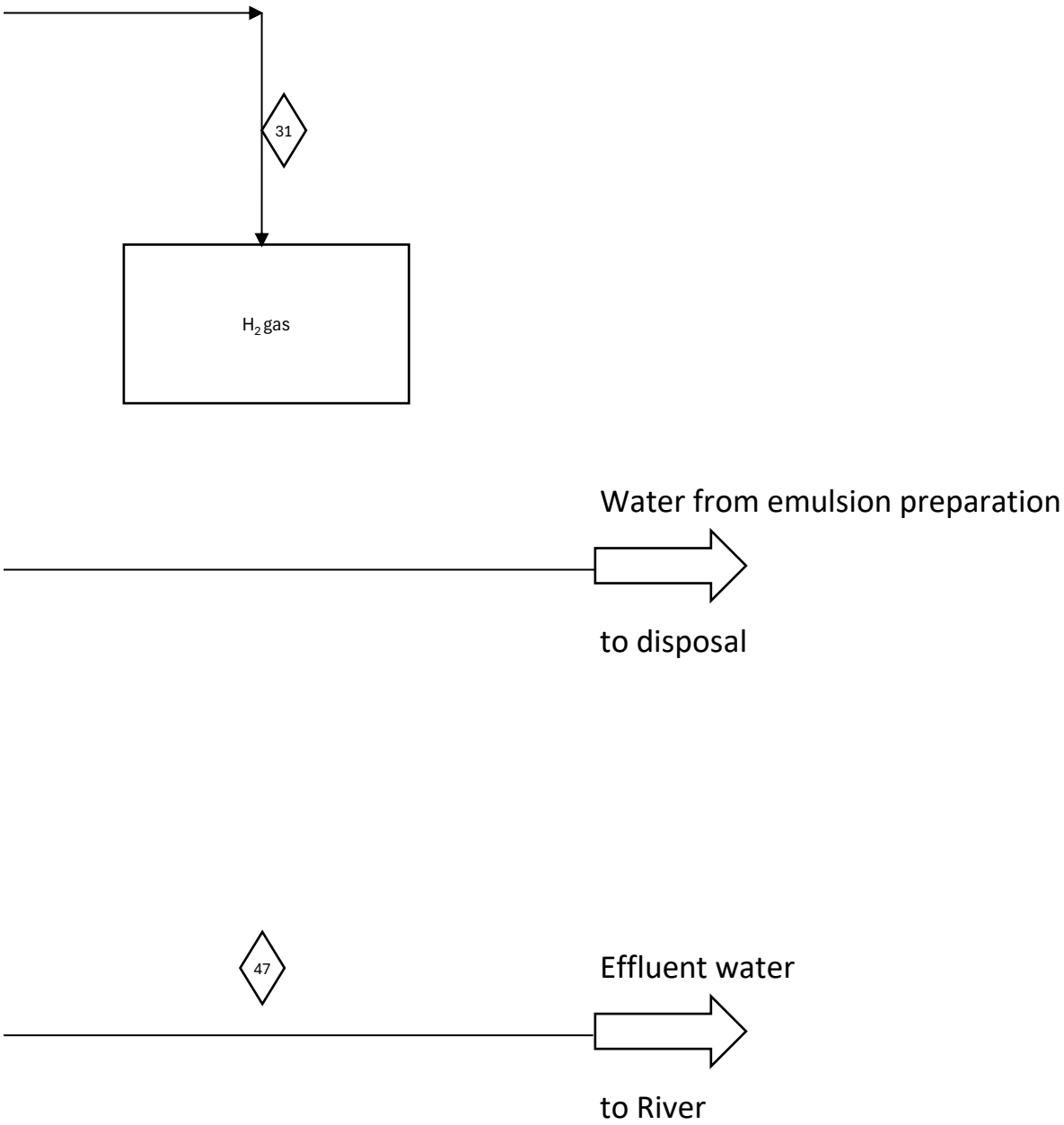
31
H_2 gas
Water from emulsion preparation
to disposal
47
Effluent water
to River

36	37	20	38	39	40	41	42	43	44
Effluent water from process cooling	Effluent water from converter gas washing	Effluent from caster	Effluent water from gas washing	Effluent water from HSM to treatment	Effluent water from cooling CRM	Effluent water from cooling regeneration	Effluent water from pickling process	Water from emulsion prep. to disposal	Process water from Galva line
379,00	350,00		36,00	147,00	879,00	152,00	10,50	1,50	11,00
379,00									
	350,00								
		180,00							
				147,00					
					879,00	152,00	10,50	1,50	
									11,00
			36,00						

45	46	47	in	out		leakage	out river	disposal
Effluent water from filtration	Cooling water from air plant	Effluent water to River				m^3/h		
287,00	440,00	4324,00					6247,00	
			5408,60	2764,30	2764,30	0,00		
			238,50	120,00	201,60	-81,60	0,00	
			391,00	197,00	194,00	3,00	194,00	
			7281,40	3751,40	3566,00	185,40	3530,00	
			758,00	379,00	379,00	0,00	379,00	
			783,00	433,00	350,00	83,00	350,00	
			419,00	239,00	180,00	59,00	180,00	
			364,60	217,60	147,00	70,60	147,00	
			2087,20	1044,20	1043,00	1,20	1041,50	1,50
			22,90	11,90	11,00	0,90	11,00	
	440,00		880,00	440,00	440,00	0,00	440,00	
			19,30	19,30	0,00	19,30	0,00	
			36,00	0,00	36,00	-36,00	0,00	
287,00			574,00	287,00	287,00	0,00	287,00	
			0,00	0,00		0,00	0,00	
			19263,50	9903,70	9598,90	304,80	6559,50	1,50
					304,80			

3%